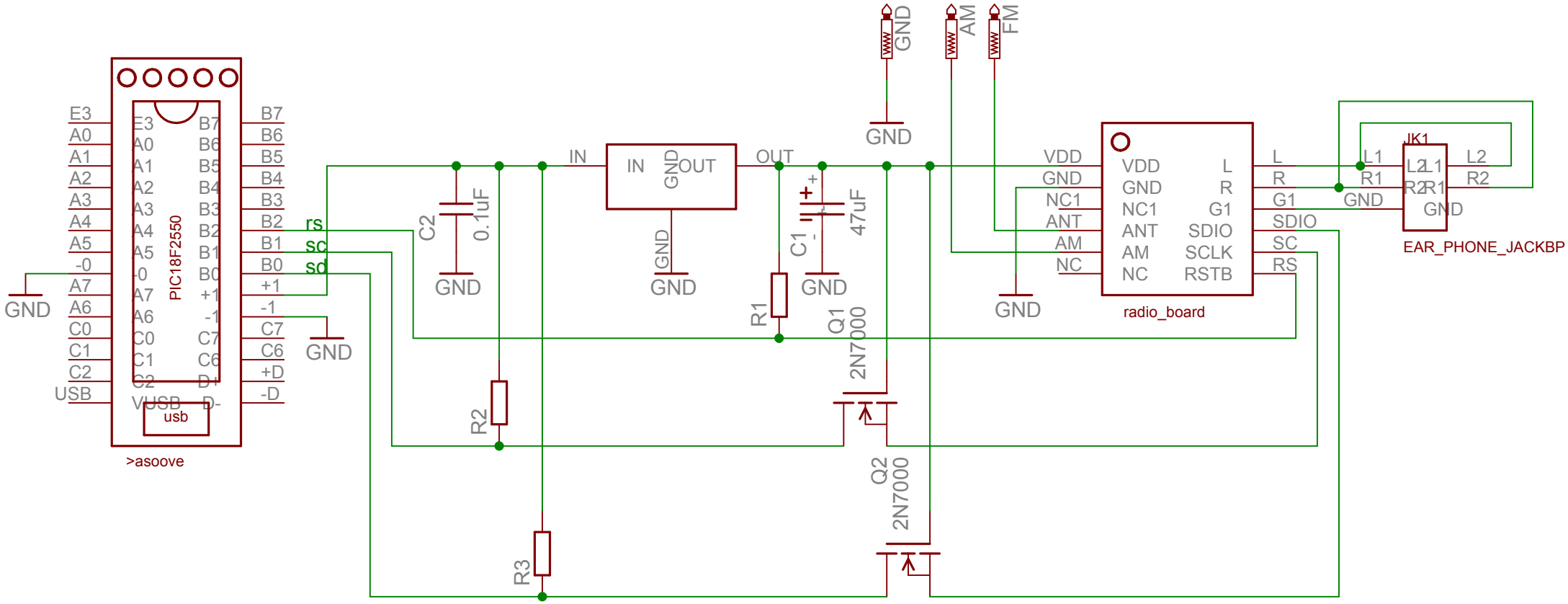
PIC18F2550
usb
>asoove
E3
A0
A1
A2
A3
A4
A5
-0
A7
A6
C0
C1
C2
USB
VUSB
B7
B6
B5
B4
B3
B2
B1
B0
+1
-1
C7
C6
+D
-D
D+
D-
GND
rs
sc
sd
C2
0.1uF
IN
OUT
GND
C1
47uF
R1
R2
R3
Q1
2N7000
Q2
2N7000
AM
FM
VDD
NC1
ANT
AM
NC
L
R
G1
SDIO
SCLK
RSTB
SC
RS
radio_board
JK1
L1
R1
L2
R2
EAR_PHONE_JACKBP