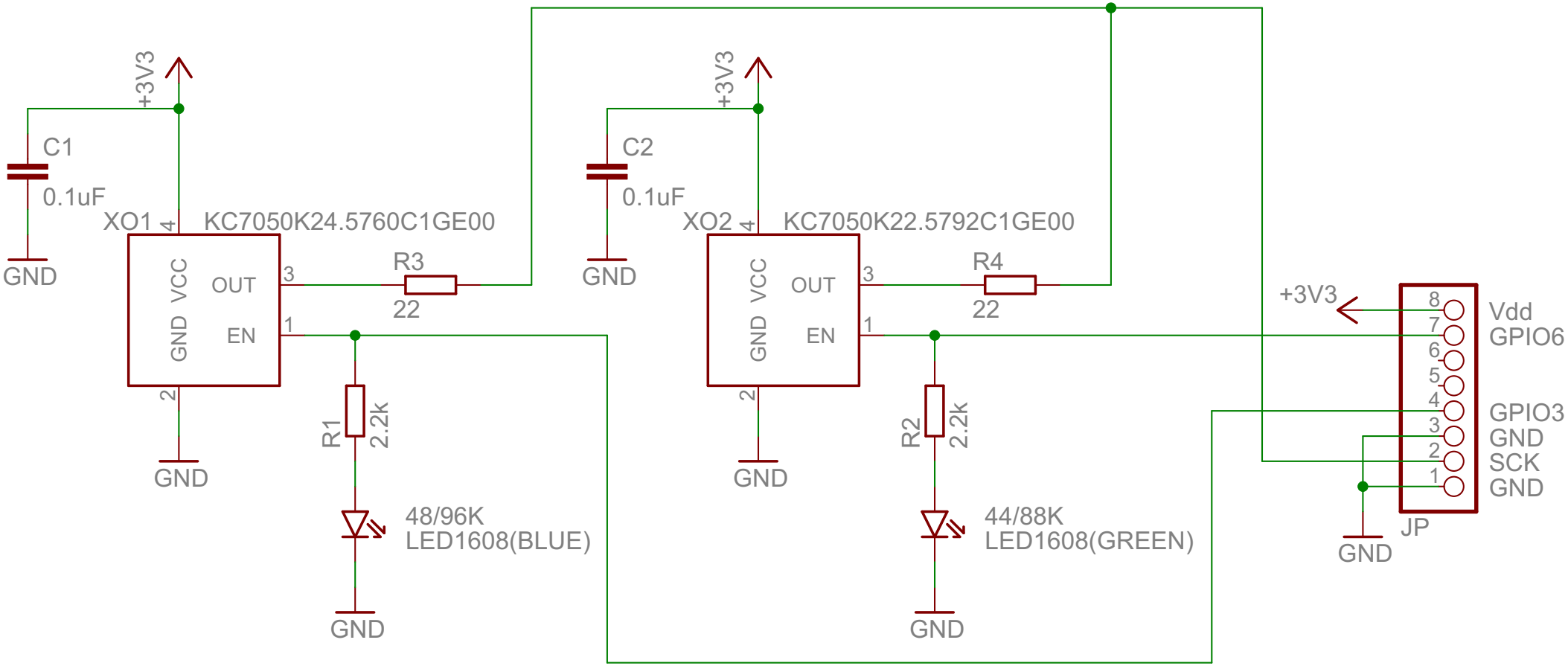
+3V3
C1
0.1uF
GND
XO1
KC7050K24.5760C1GE00
VCC
OUT
GND
EN
4
3
1
2
R3
22
R1
2.2k
48/96K
LED1608(BLUE)
GND
+3V3
C2
0.1uF
GND
XO2
KC7050K22.5792C1GE00
VCC
OUT
GND
EN
4
3
1
2
R4
22
R2
2.2k
44/88K
LED1608(GREEN)
GND
+3V3
8
7
6
5
4
3
2
1
Vdd
GPIO6
GPIO3
GND
SCK
GND
JP
GND