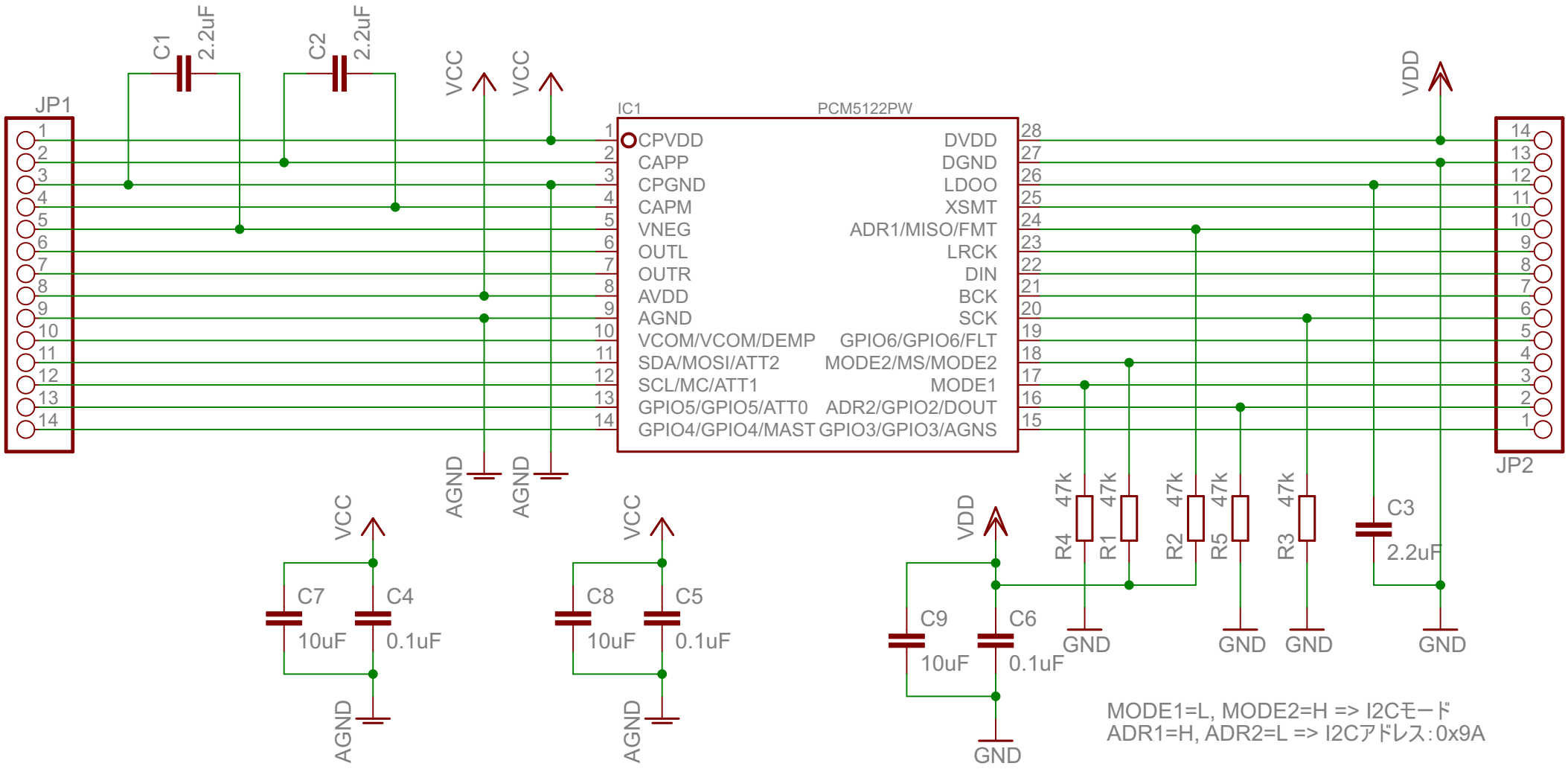
JP1
C1
2.2uF
C2
2.2uF
VCC
VCC
IC1
PCM5122PW
CPVDD
CAPP
CPGND
CAPM
VNEG
OUTL
OUTR
AVDD
AGND
VCOM/VCOM/DEMP
SDA/MOSI/ATT2
SCL/MC/ATT1
GPIO5/GPIO5/ATT0
GPIO4/GPIO4/MAST
DVDD
DGND
LDOO
XSMT
ADR1/MISO/FMT
LRCK
DIN
BCK
SCK
GPIO6/GPIO6/FLT
MODE2/MS/MODE2
MODE1
ADR2/GPIO2/DOUT
GPIO3/GPIO3/AGNS
VDD
JP2
AGND
AGND
VCC
C7
10uF
C4
0.1uF
AGND
VCC
C8
10uF
C5
0.1uF
AGND
VDD
C9
10uF
C6
0.1uF
GND
R4
47k
R1
47k
R2
47k
R5
47k
R3
47k
C3
2.2uF
GND
GND
GND
GND
MODE1=L, MODE2=H => I2Cモード
ADR1=H, ADR2=L => I2Cアドレス:0x9A